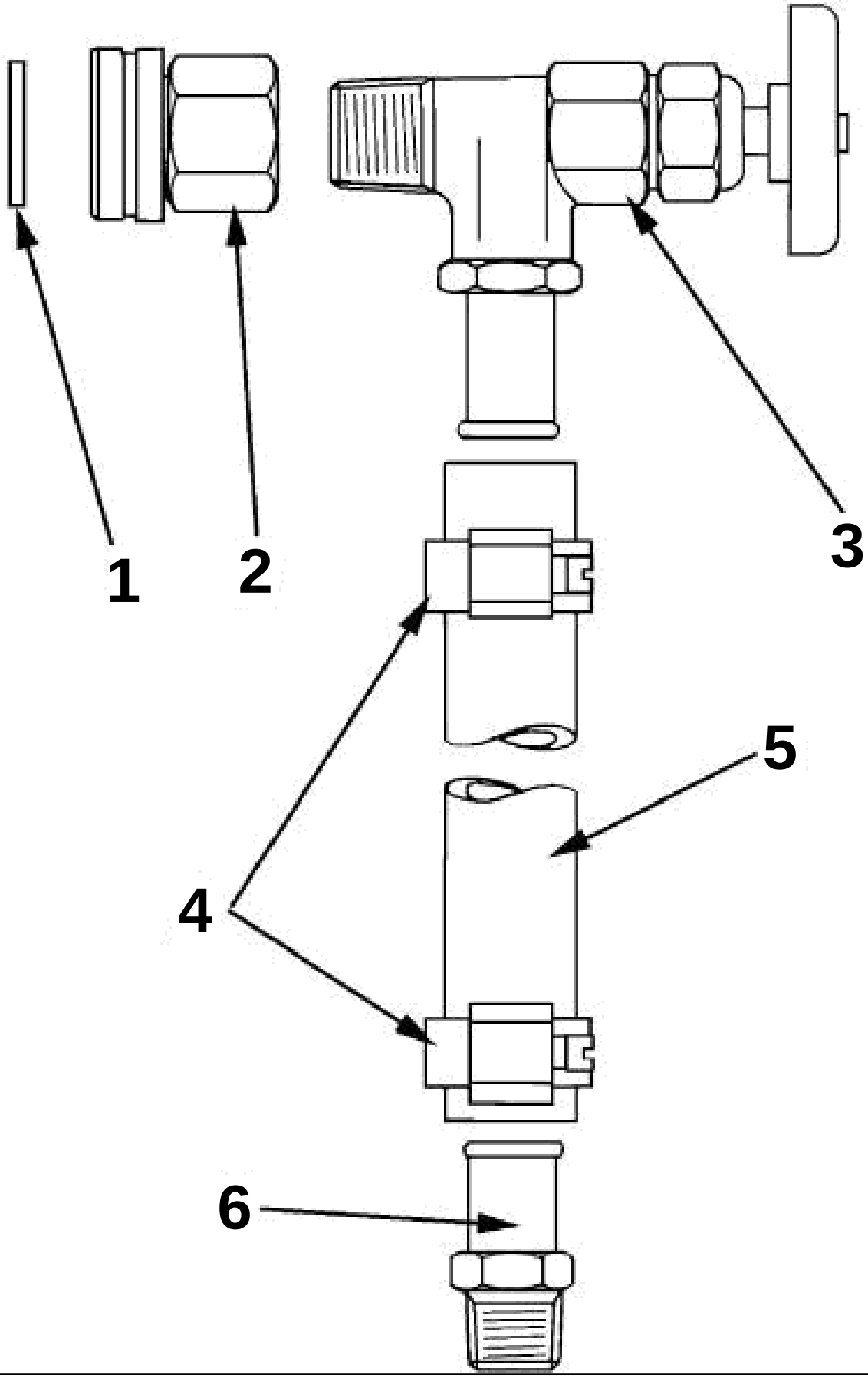
1
2
3
4
5
6

FLUSH KIT (PJX ONLY)

REF	PART NO.	QTY	DESCRIPTION
	3856516	1	Flushing connection
1	3856515	1	· Rubber gasket
2	969497	1	· Nipple
3	3856513	1	· Shut-off valve
4	961665	2	· Hose clamp
5	952969	1	· Rubber hose
6	3856514	1	· Connector